National Aeronautics and Space Administration

volume 4, number 1
SPRING/SUMMER 2011

KSC NEWS

tech transfer

Materials Science Laboratory
Martha Williams and **Luke Roberson** work on producing new technologies in polymer and materials chemistry that benefit the NASA program and mission. See pages 6-7 to learn more.

in this issue:

2 | Meet the Staff: Megan Victor
3 | NTR Corner
4 | Licensing Success
6 | Innovator Insights
8 | Partnership Success
9 | Innovative Partnership Fund
10 | Q&A
12 | Awards and Events

Meet the Staff: **Megan Victor, Project Administrator**

Megan Victor

Megan Victor has worked at Kennedy Space Center a mere two-and-one-half years, but she already seems at ease with the technology transfer process. Megan talks to innovators on a daily basis and is the person innovators would most likely talk to when they submit a New Technology Report (NTR) or a Document Availability Authorization (DAA). Megan also monitors all contracts and grants for the Technology Transfer Office. These include education grants, training grants, research grants, contract orders, and cooperative agreements.

As the Database Administrator for the NASA Technology Transfer System (NTTS), Megan is responsible for processing the New Technology Reports that are submitted via the e-NTR system. The e-NTR system is an easy step-by-step electronic reporting process used by NASA employees and contractors to disclose their innovations (including software). The system allows innovators to draft a New Technology Report and work on it at their discretion. Once complete, innovators submit their e-NTR electronically for signature.

As part of the team that supports the technology transfer process, Megan is also responsible for processing the DAA forms. According to Megan, "The DAA process is utilized to send materials that may be used for NASA Tech Briefs articles, technical support packages (TSPs), technology opportunity sheets (TOPS), success stories, conferences, and other marketing uses through a review and approval cycle to ensure the information contained in the materials is not export control sensitive."

The Technology Transfer and Partnerships Office completes the NASA Form 1676, NASA Scientific and Technical Information (STI) Document Availability Authorization (DAA). These forms are filled out electronically by using a "Desktop e-forms" program. We then route these forms through the Engineering Services Contract Export Control and then NASA Export Control for approvals.

Many people at KSC do not realize that this form follows guidelines to ensure compliance with US export rules and regulations per NPR 2190.1, NPD 2190.1, and NPR 2200.2. If you want to keep up to date with the statutory and regulatory developments in the U.S. export controls systems and appropriate laws and regulations, visit *http://exportcontrol.ksc.nasa.gov*.

Megan loves that fact that she works closely with the innovators on a daily basis. For her this is the most satisfying aspect of her position. Helping innovators make sure that their information is accurate and that the technology is reported correctly, not only helps the innovators, but saves time in the commercialization process. The technologies bring value to this country, prestige to the center, and monetary rewards to the inventors. Without innovators we would not have a commercialization office. ■

> "Without innovators we would not have a commercialization office."
>
> *– Megan Victor*
> *KSC's Project Administrator*

New Technology Report (NTR)

Technology Title: **Cam-and-Groove Hose Coupling Halves Safety Modification**

Inventors: **Paul Schwindt and Alan Littlefield**

Case #: **KSC-12713**

What it is: The technology is a modification in the mating halves of a cam-and-groove hose coupling to prevent rapid separation of the halves in the event that the cam levers are released while the fluid in the hose is pressurized. This modification can be duplicated on almost any commercially available cam and groove hose coupling halves and does not interfere with most vendors' locks that prevent accidental actuation of the cam levers. The modification forces the installation and orientation to ensure proper engagement of the coupling halves before the cam levers can be locked into position. If released under pressure, the modification captures the coupling halves so they will not rotate and disengage. Once pressure in the delivery system is sufficiently low, the couplings halves can be safely disconnected. This modification can be retro-fitted to existing cam and groove coupling halves and does not interfere with most vendors' cam lever locks that prevent accidental cam lever actuation.

Why it was needed: The innovators needed this modification at the time because commercial off-the-shelf cam-and-groove hose coupling halves did not incorporate safety features to prevent separation in the pressurized state. When the pressurized fluid was compressible (e.g., steam or compressed air), the separated halves could be propelled with considerable energy, causing personal injury and/or property damage.

History: This technology was reported in 2004 and a story was published in NASA Tech Briefs in 2008. In 2010, PT Coupling signed a Technology Transfer Agreement with Kennedy Space Center for a free transfer of the technology. They are now making commercial versions of the safety modification. The company is calling it the "pressure safe line." They started making production runs in September 2010 and are currently offering the coupling in the 2-inch and 3-inch sizes. Work is underway to develop more sizes. Currently, the NASA version of the technology is featured in the company's 2010 catalogue and listed as the "PT Pressure Safe." ■

"With the new pressure safe technology the PT Coupling Company can now offer its customers a passive safety feature that protects the operator from personal injury in the event the quick release cam arms are opened under pressure. This technology could help prevent future accidents and help to improve the hazardous working conditions of operators in the field."

– Kyle Eckhardt
Design Engineer

Modified Type A Adapter

Paul Schwindt and Alan Littlefield

Modified Dust Cap

Remediation Technology Removes PCBs From Contaminated Surfaces

Technology Solves Problem Dating Back to the 1970s

PCBs have been shown to cause cancer in animals and to have other adverse effects on immune, reproductive, nervous, and endocrine systems. Although the production of PCBs in the United States has been banned since the late 1970s, many surfaces are still coated with PCB-laden paints, caulks, and oils. The presence of PCBs in these materials adds complexity and expense for disposal. Some treatment methods (e.g., use of solvents, physical removal via scraping) are capable of removing PCBs from surfaces, but these technologies create a new waste stream that must be treated. Other methods, like incineration, can destroy the PCBs but destroy the underlying structure as well, preventing reuse.

To address limitations with traditional abatement methods for PCBs in these materials, researchers at NASA's Kennedy Space Center (KSC) and Scientific Specialists, Inc. have developed the Activated Metal Treatment System (AMTS). This innovative technology consists of a solvent solution (e.g., ethanol, d-limonene) that contains an activated zero-valent metal. AMTS is first applied to the affected surface either using spray-on or wipe-on techniques. The solution then extracts the PCBs from the contaminated surface. The extracted PCBs react with the microscale activated metal and are degraded into benign by-products. This technology can be applied without removing the affected paint, caulk, wood, or concrete and without dismantling the underlying structure. In addition, the surface can be reused following treatment. NASA has been issued one U.S. patent on the Activated Metal Treatment System technology and has another patent application pending.

James Captain Removing AMTS Paste From Surface

AMTS underwent extensive field testing throughout its development phase. During demolition of the Vertical Integration Building (VIB) at Cape Canaveral Air Force Station, pieces of the VIB structure covered with PCB-contaminated paint were used to test AMTS with different sealant coatings. Numerous PCB-contaminated structures and pieces of machinery were also used for AMTS testing at Badger Army Ammunition Plant in Wisconsin. This testing enabled the development team to observe AMTS' performance in cold climate conditions.

The KSC Innovative Partnerships Program (IPP) Office recently licensed AMTS to three commercial companies. PCB-Remediation ApS, located in Lyngby, Denmark, has an exclusive license for manufacture, use, and sale of AMTS in the European Union. Bio Blend Technologies LLC, located in Cantonment, FL, and Toxicological and Environmental Associates, Inc. (TEA), located in Baton Rouge, LA, have nonexclusive licenses for manufacture, use, and sale of AMTS in the United States.

KSC License Signing Ceremony With PCB-Remediation ApS

Dr. Cherie Geiger and Dr. Chris Clausen of Scientific Specialists, Inc. traveled to Denmark in January 2011 to provide technical assistance to PCB-Remediation ApS during the deployment of AMTS on a demonstration project involving a 298-unit apartment complex. The units in this complex have PCB contamination in the paint on the walls as well as in the caulking around windows and doors. The company is conducting this effort in part to help demonstrate the efficacy of the technology to the Danish Environmental Protection Agency in order to obtain approval for use of AMTS anywhere within the country. The company is working closely with the NASA and Scientific Specialists innovators to analyze early results and adjust their product formulation, application techniques, and measurement methods to obtain optimum results. The KSC IPP Office is continuing to market AMTS in an effort to identify and contact additional potential licensees. The goal is to make AMTS as widely available as possible for the remediation of PCB-contaminated sites. ■

1990s Technology Offers Cost-Effective Environmental Cleanup

In the late 1990s, Kennedy Space Center researcher Michelle Collins teamed with researchers David Cooper and Christian Clausen at the University of Central Florida (UCF) in Orlando as part of NASA's environmental stewardship program. The partnership called for the performance of a pilot-scale study of new technology for cleaning nitrogen oxide (NO*x*) pollutants from emissions from industrial boilers. NO*x* emissions are a primary criteria pollutant regulated by the United States Environmental Protection Agency. Kennedy Space Center is located within Florida's Merritt Island National Wildlife Refuge where environmental stability is crucial for the plants and animals.

Under the stewardship program, UCF and NASA developed a method to reduce nitrogen oxide pollutants by injecting hydrogen peroxide into the high-temperature airstreams. The chemical reaction that occurs is the oxidation of the nitrogen oxide, resulting in a 98 percent reduction. The chemical by-products were then controlled using a liquid scrubber producing a nitrogen-rich water-based waste stream. Kennedy Space Center's Technology Transfer Office evaluated the commercial potential for this technology and found potential applications in industrial areas, including large utility plants and incinerators. Because pilot-scale tests run at Kennedy Space Center demonstrated the feasibility and competitiveness of this new technology, NASA applied for and received a U.S. patent.

FMC Corporation is one of the world's foremost, diversified chemical companies with a leading global position in hydrogen peroxide and other specialty oxidants. They were exploring new marketing opportunities for their hydrogen peroxide and discovered the NASA patent U.S. 6,676,912, which was issued in 2004. FMC saw a potential new application for hydrogen peroxide to help the U.S. utility industry meet newly proposed NO*x* regulations and launched an active development project.

NASA awarded FMC with an exclusive patent license for the commercialization of the technology. FMC believes that this technology offers a simple, cost-effective means for utilities and industrial boiler operators to meet more stringent NO*x* regulations while creating a new market application for hydrogen peroxide in the United States. FMC's concept is to bundle the new technology with a power plant's existing pollution control devices to create a low capital multi-pollutant control offering. Once the technology is established at the power plant, the facility will have the opportunity to purchase hydrogen peroxide from FMC to operate the technology. Successful pilot-scale and full-scale testing of the technology has been conducted at power plants throughout the country over the last 2 years. Basically FMC provides a tank of hydrogen peroxide to the test site, pumps and injects hydrogen peroxide into the airstream through lances, and then measures the amount of NO*x* that is oxidized. They are currently working on downstream capture of the oxides. FMC foresees a commercially available system later this year after making some modifications based on test results. ■

Spray Lances Used in the Pilot Demonstration at the San Miguel Power Plant

Martha Williams, Ph.D., and Luke Roberson, Ph.D., are both part of the Polymer Science and Technology Section within the Materials Science Division of the Engineering Directorate. They both work on producing new technologies in polymer and materials chemistry that benefit the NASA program and mission. KSC Tech Transfer News spoke to both Martha and Luke about their recent work and some of the exciting technologies their team is working on now.

(Left to Right) Dick Jolley, Martha Williams, Anne Ca Snyder, and Tracy Gibson

Materials Scier

What does the Polymer Science and Technology laboratory do?

The Polymer Science and Technology laboratory's mission is to invent, develop, and apply new technologies that benefit NASA's programs and mission. Technology development areas include Polymer Nanocomposites, Aerogel Composites, Next Generation Wire Materials, Smart and Self-healing Materials, Carbon Nanotube and Nanofiber Materials, Conductive Polymers, Polymer Processing, Fire and Polymers, Foam and Insulation Materials, Chemical Sensors, and Antimicrobial Polymers. In addition to research and development, the lab supports multiple programs through chemical and material failure investigations for programs including Shuttle, Ground Operations Processing, and the Launch Services Program.

How is your lab supporting the KSC and NASA mission?

KSC's mission is to safely launch and land space flight hardware. To accomplish this, KSC is required to maintain the launch infrastructure, maintain flight vehicle readiness, and oversee launch and landing operations. The lab supports this mission by developing new specialty materials and composites to improve the safety and the operations of ground support equipment and flight hardware.

These composite materials range from improving safety through hydrogen and hypergol visual detection systems to new damage detection and repair materials. We also investigate new composite materials to improve strength and reduce weight of structural materials. The lab supports multiple KSC Technology Capability areas, including storage, distribution and conservation of fluids (cryogens, liquids, and gases), materials for life-cycle optimization, life sciences and habitation systems, and human research. The technologies also support programs that include the NASA Office of Chief Technologist, Exploration Technology Development and Demonstration, Innovative Partnership Program, and Habitat Demonstration Unit Program.

Two recently issued Kennedy patents were awarded for the work done by this team in aerogel composite materials. Why are new, lighter-weight insulations so important?

Aerogels were first created in 1931 and are known as the lightest solid material. Yet silica-based aerogels are making a significant impact today because new manufacturing methods have reduced the cost of the material so that researchers can now take advantage of their unique thermal insulation properties, their ability to reduce heat transfer of composite materials, and their light weight. The team's vision is to reduce the weight of lunar habitat systems or cryogenic storage tanks, piping, and components, where weight and thermal conductivity are critical to mission success.

Lillianna Fitzpatrick

Through the addition of aerogels into thermoplastic polymers (AeroPlastic™) using 5 to 15 weight-percent, we were able to achieve between 25 to 50 percent reduction in thermal heat transfer without greatly affecting the mechanical properties or processing conditions. Testing has also shown that possible synergistic effects can be achieved with the combination of flame-retardant additives to reduce the flammability of the material and an offset of peak heat release rate of the composites. In the aerogel/foam (Aerofoam™) composite mixtures and sandwich constructions (up to 40 weight-percent of aerogel), enhanced thermal performance, fire resistance, vibration dampening, and the capability of cryogen storage capabilities were demonstrated. These technologies also demonstrated great collaborative efforts with the KSC Cryogenics Laboratory.

What are the NASA and commercial applications of Aerofoam™ and AeroPlastic™?

KSC operations require the use of large amounts of cryogenic liquids from fuels (such as liquid hydrogen and oxygen) to purge gases (such as liquid helium).

raccio, Lilliana Fitzpatrick, Luke Roberson, Sarah

nce Laboratory

Producing and storing these low-temperature liquids require tremendous amounts of energy, thus any material that can reduce thermal conductivity between storage and feed lines from the ambient environment is critical to reduce boil-off and limit power needed to run refrigeration equipment.

Similarly, commercial businesses, in the face of increased energy costs, continually desire cutting-edge insulation technologies. The oil and gas industry uses and processes low-temperature commodities, such as liquefied hydrocarbons, where any decrease in thermal conductivity reduces cooling costs and boil-off, directly impacting the company's bottom line. Advanced building products, such as hardy plank siding, wood decking, and roofing materials containing AeroPlastic™, would reduce home energy loss through improved thermal insulation. The Aerofoam™ technology could also have medical industry applications in maintaining required temperatures of medicines and pretransplant storage during long-term shipment.

How did polymer science become matched with hydrogen detection?

The hydrogen-sensing tape technology originally began at the Florida Solar Energy Center operated by the University of Central Florida. Hydrogen is an important commodity in aerospace and is a future alternative energy source for the automotive industry. Because of its low-exposure limit, highly energetic combustibility, and invisible flame, hydrogen is an inherently dangerous gas. Area sensors only detect the presence, not the source, of hydrogen leaks. In high-wind environments such as launch structures, sensors may not detect leaks at all. Hydrogen tape and molded parts overcome these limitations by providing users with an easily deployable visual indication system that can precisely pinpoint the location of a leak. Work is also under way to develop HyperTape, a tape that visually detects the presence of hypergols, another dangerous but ubiquitous chemical at KSC.

How can the hydrogen tape be deployed at KSC?

Hydrogen tape was deployed on STS-117, 118, 120, 122, and 123 in the Orbiter mid-body umbilical to test for leaks during loading of the fuel cells. It was also used for STS 130, 131, 132, and 133 on flanges on the cryogenic fuel lines, cross-country vent lines, and within the tail service mast. This testing was mainly to raise the technology readiness level of the project to determine its ability to withstand the extreme conditions of a launch environment. Since hydrogen is the primary fuel source for Shuttle, Delta IV, and Atlas V upper stage rockets and may be a fuel for future commercial space vehicles, we anticipate the need for this technology in future launch vehicles and ground support equipment. The technology may also be used in hydrogen cars or fueling stations at KSC if and when the hydrogen economy emerges.

What are the wire damage detection and repair technologies?

This is really an important portfolio of novel and game-changing technologies collaboratively developed with the contractor team members. The goal is to detect the location of wiring faults and either manually or autonomously self-repair the damage. Detection occurs by Time Domain Reflectometry (TDR) or other forms of reflectometry. The new technology provides the capability to detect damage in either the wire core or insulation (or both). The insulation damage detection utilizes a conductive detection layer incorporated in a new wire construction. Once the damage is located, the damaged zone can be quickly isolated and manually repaired. Further incorporating "self-healing" materials into the insulation layers will negate the need to manually repair a wire if damage is within the size tolerance for self-healing capability. If manual repair is required because of severe damage, a new, permanent, hermetic repair system will be available. As the technology readiness levels were advanced, partnerships with NAVAIR and commercial wiring manufacturers have resulted in great potential for technology transfer and infusion. Four patents were filed within this technology portfolio at the end of 2010 and beginning of 2011, with several more patents slated for the coming months of 2011.

Tracy Gibson

Is wire damage detection and repair solely a NASA problem?

Wire damage detection and repair are major problems for NASA and are also found in many systems across many industries. Government, commercial and private aircraft, battleships, automobiles, industrial processes, mining industry, power production facilities, and server farms all contain miles of crucial wiring infrastructure that could be impacted by the incorporation of this technology. ■

Dust-Tolerant Intelligent Electrical Connection System

Lunar and Martian dust poses a significant challenge to future exploration missions. Astronauts will be required to make and break various connections with their gloved hands in dusty reduced-gravity environments. Dust contamination in electrical connectors can lead to circuit failures, decreased reliability in the connection, and increased cost and maintenance. Dust contamination in connection systems also poses a risk to safety as it will lead to increased wear in the system.

In early 2010, Kennedy Space Center (KSC) researchers proposed to further investigate and develop an electrical connection system to mitigate lunar dust intrusion and accumulation on reusable electrical connectors. Researchers were also interested in exploring nonintrusive methods to detect circuit faults and automatically reroute signals while a vehicle or lunar surface system equipment is in operation.

The work done on the development of this system was based on earlier work done by Mark Lewis (NASA researcher) and his team during a 2009 Innovation Fund project by the Innovative Partnerships Program (IPP) Office. The focus of the Innovation Fund project was to develop a concept and approach to developing a dust-tolerant connection system that could also detect failures and autonomously transfer damaged/defective conductors to an alternate wire path.

The IPP Office provided funding to enable further development of the Dust-Tolerant Intelligent Electrical Connection System. After a rigorous design and down selection process, KSC researchers developed a rapid prototype of a blade contact with retractable dust-cover connection system (pictured). To enable testing, the researchers also designed and fabricated a dust-tolerant intelligent connector testbed. This testbed was used to perform testing of the connection system as well as the circuits in the system to detect faults and facilitate automatic rerouting of the signals in the system.

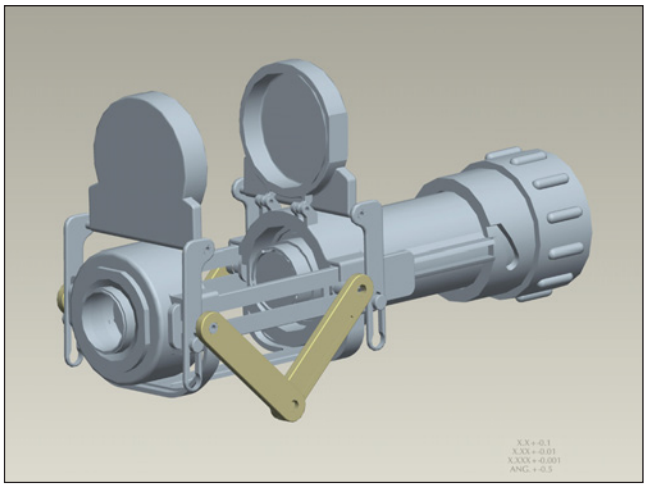

Hybrid Flip Cap

This dust-tolerant intelligent electrical connection system has a number of applications for future NASA Lunar and Mars missions, as well as the military and in the mining and oil and gas exploration operations. ■

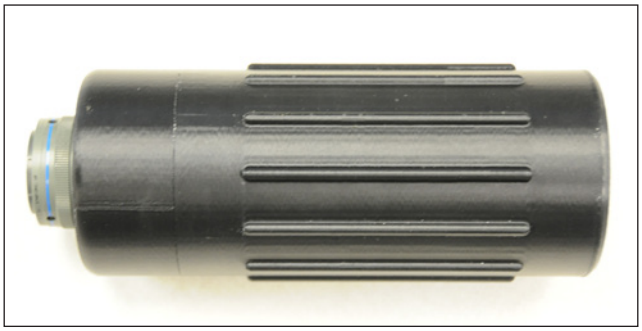

Female Blade Connector

Male Blade Connector With Dust Cover Retracted

Cryogenic Orbital Testbed (CRYOTE)

The Cryogenic Orbital Testbed (CRYOTE) is a collaboration between NASA and commercial companies to develop an orbital testbed that will demonstrate cryogenic fluid management technologies in space environments. The Cryogenic Orbital Testbed will also provide a platform for experimental studies of technologies for long-term propellant depots in space. The partners involved in the development of this system include United Launch Alliance (ULA), Sierra Lobo, Innovative Engineering Solutions (IES), Yetispace, and NASA Glenn Research Center, Kennedy Space Center, and Marshall Space Flight Center.

The basic CRYOTE concept consists of installing an insulated cryogenic receiver tank inside an Evolved Expendable Launch Vehicle (EELV) Secondary Payload Adapter (ESPA) ring. The CRYOTE system would be launched with the receiver tank empty as a secondary payload on an Atlas V mission, and the residual liquid hydrogen propellant would then be transferred from the Centaur upper stage into the CRYOTE receiver tank after the primary payload has been deployed.

Recent work at Kennedy Space Center on this system, funded by the Innovative Partnership Program (IPP) Office, included the installation of multi-layer insulation (MLI) blankets on the CRYOTE ground test article (pictured). The ground test article includes a thermodynamic vent system, with vapor-cooled structure and a cryogenic mass gauging system that is planned to be tested in a cryogenic vacuum test chamber at Marshall Space Flight Center. Other components of the ground test article include EELV ESPA payload adapter ring (ESPA Ring), developed by ULA; composite structural skirt, designed by IES and built by Scorpious Space Launch Co.; titanium tank, provided by JPL; and the Cryo-Tracker, provided by Sierra Lobo. The test hardware was assembled and instrumented by IES and KSC.

The KSC IPP office and NASA Launch Services Program (LSP) have also contributed funding towards the development of the CRYOTE avionics design and structural interface requirements with the ESPA ring and Centaur upper stage propellant tank. In addition, the development of the Cryo-Tracker mass gauging system was initialized via a joint SBIR with the DoD and LSP. Further development continues via SBIR Phase III contracts.

CRYOTE offers a diverse test platform capability that can be evolved for many applications. These include cryogenic propellant storage and transfer, space-based fluids and thruster research, small payload delivery, spacecraft servicing, and orbital rendezvous and maneuvering. ■

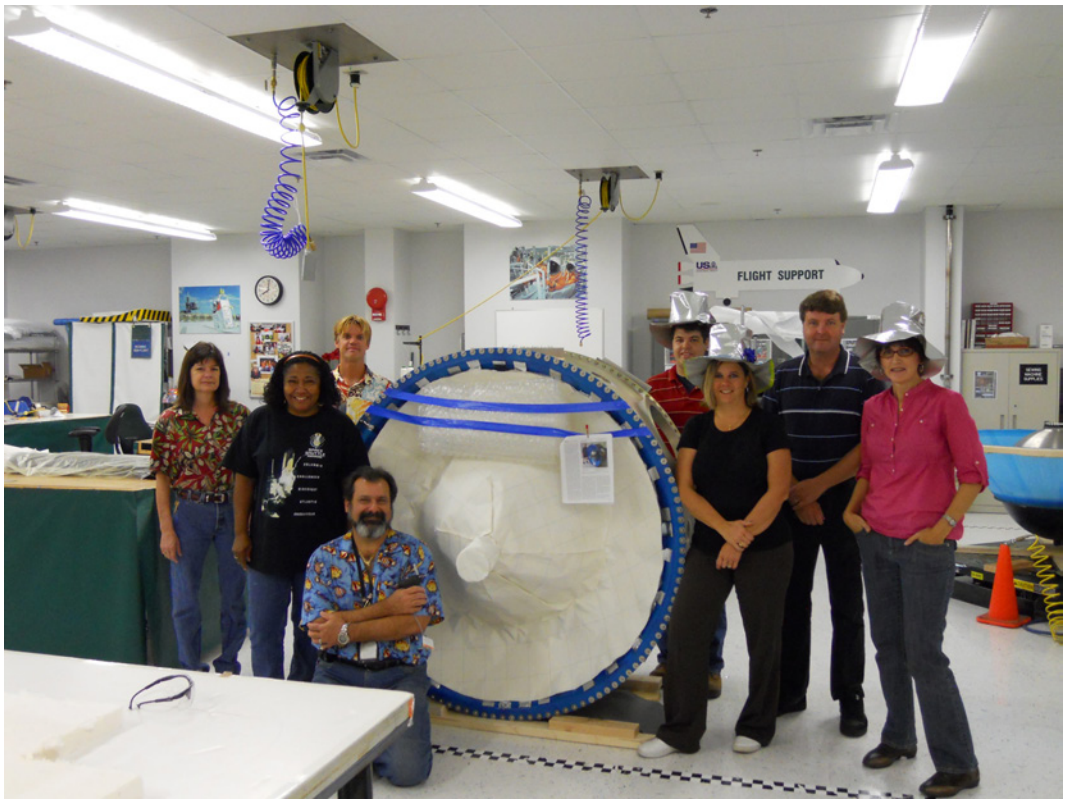

CRYOTE Ground Test Article. (From Left to Right) Laurie Walls (LSP), Betty Smith (USA), Tim Wright (USA), Kevin Harrington (USA), Wesley Johnson (NE), Debbie Mitchell (USA), Martin Wilson (USA), and Pilar Ryan (USA).

q&a

Q&A

Everything you need to know about software release and were afraid to ask.

I have NASA developed software that another NASA project is requesting to use. Can I just hand over a copy of the software to the other project, or is there something I need to do before making the transfer?

It depends on the situation. There are two instances where it is permissible to transfer software from one party to another without any formal software release approval or use of software usage agreements. Those two instances are: (1) civil-servant-to-civil servant transfer of software within the same NASA Center; (2) civil-servant-to-civil-servant transfer of software within the same project. When transferring software within the same project, the transfer must be handled by the office that developed the software. In other words, a second project office that received the software from the developing office cannot then turn around and give the software to a third office on the same project. The third office must go directly to the office that developed the software to obtain the transfer. When transferring software under either of these two scenarios, use of the software must be limited to civil servants only. As long as this is the case, the software may be transferred without paperwork of any kind; however, if contractors will be receiving and using the software, there are other procedures that must be completed before the software can be transferred.

Contractors will have access to and use the software I will be transferring. What other actions do I need to take before I can transfer the software to the other project?

When a software transfer will involve use by a different project or use by support contractors or an outside third party, the software must be approved for release by the NASA Center Software Release Authority (SRA) and be transferred using a software usage agreement. There are multiple steps that must be completed in order to properly transfer the software:

1. Determine if the software has been reported as a new technology report (NTR) to the Technology Transfer and Partnerships Office (TTPO) and been assigned a case number. If this has not been done, you will need to report the software using the e-NTR system at *https://ntr.ndc.nasa.gov*. Once the NTR has been successfully processed through the e-NTR system, the TTPO will notify you of the case number that has been assigned to the software.
2. Contact the Center SRA and request a transfer of your software using the case number identifier. The SRA will determine if the software has already been previously approved for release.
   a. Software Previously Approved for Release - the SRA will send a Software Usage Agreement Questionnaire to the party who will be receiving the software. This form gathers information about who will be receiving and using the software as well as how the software will be used. If it is determined that the recipient is authorized to receive it, the SRA will prepare and send a software usage agreement to the party who will receive the software.
   b. Software Not Previously Approved for Release - The SRA will send you a Software Release Request Authorization (SRRA) questionnaire to complete. This form, used to collect information about the software and its compliance with NASA requirements and standards, should be filled out by someone who is intimately familiar with the development of the software. Additionally, the SRA will send a Software Usage Agreement Questionnaire to the party who will be receiving the software. As described earlier, this form gathers information about who will be receiving and using the software as well as how the software will be used. The SRA will use the information from these two forms to determine: (a) if the software meets all release criteria (e.g., requirements compliance, export control, IT security, legal), (b) what type of release is authorized (e.g., project release, U.S. release, public release), and (c) if the software recipient is authorized to receive the software. If it is determined that the software is releasable and the software recipient is authorized to receive it, the SRA will prepare and send a software usage agreement to the party who will receive the software.
3. When the software recipient completes and returns the Software Usage Agreement (from step 2a or 2b) to the SRA, the SRA will advise you if it is permissible to provide the software to the recipient.

Questions Regarding Software Release

The NASA Center Software Release Authority for Kennedy Space Center is Roger Liang. If you have any questions regarding the transfer of NASA-developed software, either internally or externally, please contact Mr. Liang at (321) 861-2224 or *Roger.H.Liang@nasa.gov*.

Q&A

Jeffrey L. Heninger
Headquarters Trademark Attorney

KSC Tech Transfer News has covered most aspects of intellectual property law in relation to KSC innovators and their work here at NASA. However, we have not touched on Trademarks, in part because trademarks are not as important to our work as patents and copyrights. In this issue, we turned to NASA Headquarters trademark attorney, Jeffrey L. Heninger, to give a brief overview on trademarks and explain for our readers how the NASA logo figures into the equation.

Is NASA's Insignia (the "meatball" logo) protected by a trademark?

The NASA Insignia has represented NASA for years and is an iconic symbol of the Administration. The NASA Insignia is not a US registered trademark, because it, as well as certain other NASA identification assets, is protected by other Federal laws that impose protections and use restrictions similar to those of US registered trademarks.

Pursuant to the Space Act (51 U.S.C. § 20141), NASA's Agency name and initials may not be used by any person or in connection with any product/service in a manner reasonably calculated to convey the impression that the person, product, or services has a connection to, or endorsement by, the Agency that does not exist. The US Attorney General may bring suit in Federal court to enjoin any person from violating the foregoing statute.

Use of the NASA Seal, the NASA Insignia, the NASA Logotype, the NASA Program Identifiers, and the NASA Flags are restricted by Federal regulation, and failure to comply with such restrictions may result in the levy of fines or imprisonment under Federal criminal statutes.
(See, 14 CFR § 1221.100 - .116)

Can you explain for us what is meant by a trademark and what is meant by a trade secret?

A trademark is a word, phrase, symbol, design, or a combination thereof, or even at times a color or sound, that identifies and distinguishes the source of the goods of one party from those of others.

A trade secret, as defined under 18 U.S.C. § 1839(3) (A), (B), has three parts: (1) information; (2) reasonable measures taken to protect the information; and (3) which derives independent economic value from not being publicly known. A typical example of a trade secret would be the recipe for Kentucky Fried Chicken. It is intellectual property in which KFC owns rights as a consequence of their having never disclosed the recipe.

What is a service mark and what is a certification mark?

A service mark is a word, phrase, symbol, design, or a combination thereof, that identifies and distinguishes the source of a service rather than goods. The term "trademark" is often used to refer to both trademarks and service marks.

A certification mark is any word, phrase, symbol or design, or a combination thereof owned by one party who certifies the goods and services of others when they meet certain standards. The owner of the mark exercises control over the use of the mark; however, because the sole purpose of a certification mark is to indicate that certain standards have been met, use of the mark is by others.

Does the Government own trademarks and trade secrets?

Agencies of the Federal Government may own trademarks.

The Federal Government does not own trade secrets as that term is defined in law. The Government is subject to the Freedom of Information Act (FOIA), so any information that the Government wants to withhold from the public must qualify under an exemption to the FOIA. Information that the Government may withhold under the FOIA that most resembles trade secrets are matters relating to national security and patent applications.

Can the ownership of a trademark be assigned or transferred from one person to another?

The owner of a trademark may transfer ownership of the trademark to another through an assignment. An assignment of ownership transfers the assignor's priority in the use of the trademark to the assignee only if the assignee also acquires the line of business that is associated with the designation or otherwise maintains continuity in the use of the trademark by continuing the line of the business without substantial change. An assignment of ownership that does not maintain continuity in the use of the trademark in this manner can result in abandonment of the trademark or loss of priority in the trademark.

For more information on the NASA Logo and its uses, contact KSC's patent counsel Randall Heald at 321-867-7214, *Randall.M.Heald@nasa.gov*.

Use of the NASA Logo and Name

NASA Statute (51 U.S.C. § 20141) and Regulations (14 CFR § 1221.1) pertaining to the use of the NASA name and insignia.

Reference 18 U.S.C. § 1017 for provisions concerning penalties for use of the NASA Seal in a manner other than as authorized by 14 CFR § 1221.1.

Reference 18 U.S.C. § 701 for provisions concerning penalties for use of the NASA Insignia, NASA Logotype, or NASA Program Identifier in a manner other than as authorized by 14 CFR § 1221.1.

See the NASA Insignia Graphics Standards Manual for information regarding the graphics standards concerning the NASA Insignia.

The Cryogenics Test Laboratory at Kennedy Space Center focuses on research and development in areas such as thermal insulation systems, cryogenic component test and evaluation, low-temperature applications, and propellant servicing systems. Recently added to the lab's capabilities was the development of a modular Simulated Rapid Propellant Loading (SRPL) system. The SRPL can be used as both a testbed for new cryogenic technologies as well as a training tool for cryogenic engineers and technicians. Earlier this year the SRPL was awarded the Engineer's Council Distinguished Engineering Project Achievement award during National Engineer's Week in Universal City, California. The Engineer's Council is a California-based organization whose mission is the advance the art and science of engineering for the general welfare of humankind. Previous aerospace-related projects to receive this award include the Ares 1-X Roll Control System in 2010, Phoenix Mars Lander in 2009, the Mars Exploration Rover in 2005, and the International Space Station Power System (the first project to receive the inaugural award) in 1998.

Led by ASRC Aerospace's Walt Hatfield and NASA's Jared Sass, a 32-person team developed the portable SRPL that can safely and energy-efficiently load a launch from chilldown of the ground systems through vehicle replenish in less than one hour. This may not sound like a big feat, but a typical vehicle propellant load, for instance on the Shuttle, takes over six hours and requires 15 to 25 engineers. Of course, this can be problematic in launch turnaround scenarios and missing a launch window attempt. By the use of multiple cryogenic pumps in parallel, smart valves, smart sensors, advanced knowledge-based software, fault detection, and numerous other new technologies and innovations, the SRPL can load a launch vehicle with liquid oxygen in less than one hour using only 3 to 4 engineers. This is unparalleled in the launch vehicle propellant-loading industry. The SRPL was designed and validated to prove the concept of rapid propellant loading of a launch vehicle. This system has been proposed for the 21st Century Space Launch Complex propellant system.

In addition to the Engineer's Council award, the team received several other awards from ASRC Aerospace and NASA for their accomplishment. ■

Walt Hatfield, system innovator and designer, and Gary Wall adjust a vent valve during preparations for LN_2 cold shock of the Simulated Propellant Loading System.

Kennedy Tech Transfer News

http://technology.ksc.nasa.gov

lead: David Makufka
321-867-6227
David.R.Makufka@nasa.gov

editor: Carol Dunn
321-867-6381
Carol.A.Dunn@nasa.gov

Kennedy Tech Transfer News is the semiannual magazine of the Innovative Partnerships Program at NASA's Kennedy Space Center, Florida.

This magazine seeks to inform and educate civil servant and contractor personnel at Kennedy Space Center about actively participating in achieving NASA's technology transfer and partnership goals.

Please send suggestions or feedback to the editor.

Special thanks for assistance with photography: Sandra Joseph, assisted by Anthony (Tony) Gray, Analex Corp.

Dr. Jacqueline Quinn and Dr. Kathleen Loftin attended a "NASA Spinoff Day on the Hill" in Washington, D.C., on March 16, 2011. They met legislators and discussed their technologies, the Activated Metal Treatment System for removal of PCB's in paint and Emulsified Zero Valent Iron remediation technology.

James Nichols and Lew Parrish marketed environmental remediation technologies at the Brownfields 2011 Conference in Philadelphia, PA, on April 3-5, 2011.

A Software Release Working Group meeting is scheduled for May 17–19 at Langley Research Center in Virginia to discuss updates to the software release process.

www.nasa.gov

SP-2011-4-083-KSC